Starrett®

Optical Comparators

HE400
HB400
HD400
HF600
HF750
HS600
HS750
VB300
VB400
VF600

METROLOGY SOLUTIONS

Starrett® HB400

METROLOGY SOLUTIONS

Starrett Optical Comparators

RUGGED, ACCURATE & EASY TO USE

Starrett optical comparators provide a time-tested, cost-effective solution for non-contact measurement. In this easy-to-learn technology, the image of a part is projected on a screen at a precisely known magnification. Measurements can then be taken off the image by moving the system's X-Y stage, or the image can simply be compared to a transparent overlay.

Our optical comparators combine mechanical stability with precision optics and versatile lighting to produce bright, sharp images and exceptional accuracy. We offer models in different sizes, with horizontal or vertical projection, lenses for magnifications from 10x to 100x, optical edge detection or video edge detection, manual, motor-driven or CNC workstage travel, and choice of digital readouts and displays. Optional 5x fixed or interchangeable lens available by special order. Our proven mechanical designs are now enhanced with the latest metrology software for unmatched flexibility and productivity.

Horizontal Benchtop Optical Projector

The HB400 Horizontal Optical Comparator provides exceptional performance with a fully-usable 16" diameter viewing screen, a 21"x5" workstage, 12"x6" of stage travel, and high 110lb workload capacity. Linear glass scales provide 0.00002" (0.5µm) of resolution. A bayonet-style lens mounting system accepts a choice of six interchangeable lenses as well as our OV2 Zoom or the TOV2 fixed magnification. Optional 5x fixed or interchangeable lens system is available by special order. Optional optical edge detection removes operator subjectivity in locating edges.

Video Edge Detection

The HB400 can provide the ultimate in system flexibility and be converted from optical comparator to vision measurement system operation when using the OV2 6.5:1 zoom lens or TOV2 Telecentric fixed magnification video system. The TOV2 offers a choice of two lens magnifications including 0.3x or 0.5x.

5x fixed lens shown

Features

- All metal construction for optimum stability
- 16" (400mm) diameter screen with crosshairs and overlay clips
- Dual mirror design for vertically erect image
- 21.3" x 5.1" (540 x 130mm) stage surface
- 12" x 6" (305 x 153mm) XY stage travel
- 110lb (50kg) maximum load capacity
- Bayonet-style lens mounting system for quick magnification changes
- Fine adjustment for X and Y axes
- Quick release mechanism for X-axis
- Heidenhain glass scales for 0.00002" (0.5µm) X and Y resolution
- Helix angle adjustment with ±15°
- Fan cooled LED surface and profile illumination
- Fixed duplex fiber optic surface illumination

Options

- Six interchangeable fixed magnification lenses including 10x, 20x, 25x, 31.25x, 50x, 100x
- Optional 5x fixed or interchangeable lens system available by special order
- OV2 Video Zoom Lens System with video edge detection
- TOV2 Telecentric Video System with video edge detection and a choice of .3x or .5x fixed magnification
- Choice of Quadra-Chek® digital readouts, MetLogix™ M1 tablet, or MetLogix™ M2 or M3 measuring software with touch screen monitor and PC
- Optional 16" (400mm) extended travel stage available by special order
- 23" (58cm) or 32" (81cm) purpose built cabinet stand
- Canopy and curtains (designed to mount on the Starrett cabinet stand)
- Swing away lamp house
- Extensive line of accessories

Starrett HB400

MetLogix™ M1 measuring software utilizes an Android operating system and a Bluetooth connection. Clean and simple touch screen interface with large icon buttons and intuitive operation.

MetLogix™ M2 measuring software with a 15.6" color touch screen, 2D geometry software for point, line, circle, distance, angle and skew. Windows® 7 PRO operating system. Supports optical edge detection and CNC control.

MetLogix™ M3 measuring software displays on a touch screen monitor and PC. Supports both optical edge detection and video edge detection, and has Wi-Fi network connectivity for import/export of CAD files and data.

Quadra-Chek® QC221 Digital readout. Monochrome LCD screen (5.7"), sealed metal housing, 2D geometry software. Supports optical edge detection.

Clockwise from the top:
MetLogix™ M3
Quadra-Chek® QC221
MetLogix™ M1

Feature	MetLogix™ M3	MetLogix™ M2	MetLogix™ M1	Quadra-Chek QC221
Mounted to comparator arm	x	x	x	x
Color graphics	x	x	x	
Touch screen operation	x	x	x	
MS Windows® operating system	x	x		
X-Y-Q (angle) measurements	x	x	x	x
2D geometry software with skew	x	x	x	x
Optical edge detection option	x	x	x	x
Video edge detection option	x			
CAD file import and export option	x			
CNC drive option	x	x		
Software developer	MetLogix™			Metronics / Heidenhain

HB400 Dimensions

Gross weight: 385lb (175kg)

Net Weight: 320lb (145kg)

Shipping dimensions:
49" x 32" x 51" (125 x 81 x 130cm)

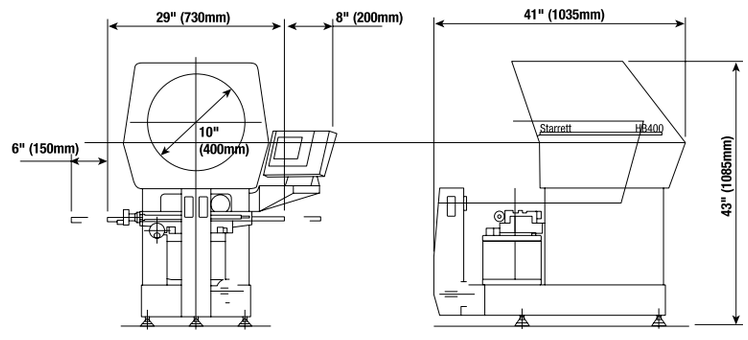

HB400 Optics

The HB400 is available with a choice of six interchangeable fixed magnification lenses, the OV2 Zoom Video System, or the TOV2 Telecentric Video System. Interchangeable lens assemblies, the OV2 and the TOV2 Video Systems are mounted with a bayonet-style lens mounting system allowing quick changeover between lens magnifications or between OV2 or TOV2 Video Cameras and VED operation. Optional 5x fixed or interchangeable lens system available by special order.

Lens Selection Guide

Magnification	5	10	20	25	31.25	50	100
Screen Diameter	16"						
Field of View	3.1" (80mm)	1.6" (40mm)	.8" (20mm)	.6" (16mm)	.5" (13mm)	.3" (8mm)	.16" (4mm)
Working Distance	5.3" (135mm)	3.1" (80mm)	3" (76mm)	2.5" (62mm)	2.2" (57mm)	2" (50mm)	1.5" (41mm)
Max. Dia.: Half Field	11" (280mm)	9.5" (245mm)		10.3" (263mm)	10" (253mm)	7.1" (185mm)	4" (106mm)
Max. Dia.: Full Field	11" (280mm)	7" (180mm)	8" (200mm)	10" (250mm)	9" (234mm)	5" (125mm)	3.9" (98mm)
Projected Image	Vertically correct						

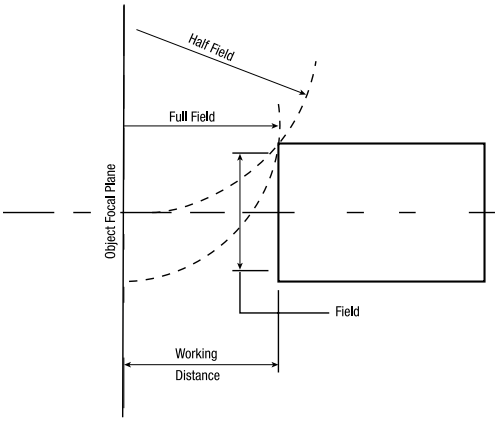

Field Of View Terminology

Working Distance:	Is the distance between the objective lens and the component when the component is in focus
Field Of View (FOV):	Is the viewable area. To fill the 16" (400 mm) diameter screen when using a 10x lens, the maximum diameter object projected would be 1.6" (40 mm).
Half Field View:	Is the maximum size a component can be projected to the center of the screen before colliding with the lens.
Full Field of View:	Is the maximum size a component can be projected over the full screen before colliding with the lens.
Projected Image:	Is how a component is projected onto the screen in relation to its placement on the workstage.

Accessories

Starrett manufactures a comprehensive range of fixtures and accessories for our line of optical comparators. Each accessory is made from the highest quality material and is machined, assembled and inspected to the same stringent quality standards as the comparator itself.

Accessories

Precision Centers and Vees

Rotary Vee Blocks

Rotary Vises

Cabinet Stands

Vertical Glass Plate Holders

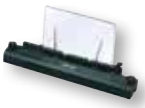

Magnification Check Graticule

Fixed Vises

Starrett Metrology Division

Starrett Kinemetric Engineering, Inc.
26052-103 Merit Circle
Laguna Hills, CA USA 92653
Tel: 949-348-1213

Starrett.com

HB400

Bulletin 964
PDF 05/16